Baby changing station

EN

Ref. CP0016V/VCS/VCSB

Ref. CP0016V-I/VCS-I/VCSB-I

Vertical

Wall-mounted

2024 WINNER EUROPEAN PRODUCT DESIGN AWARD

DESIGN AWARD 2026

reddot winner 2026



CP0016V/CP0016V-I

Polypropylene

White



CP0016VCS/CP0016VCS-I

Polypropylene/Stainless Steel AISI 304

Satin



CP0016VCSB/CP0016VCSB-I

Polypropylene/Stainless Steel AISI 304

Black

PVD COATING AVAILABLE (consult us)

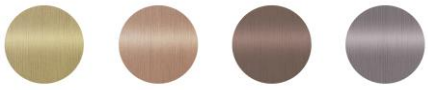

OVERVIEW

- Vertical baby changing unit for direct wall installation.
- An ideal solution for public spaces, suitable for high-traffic facilities.
- Incorporates the Biocote® antimicrobial additive based on silver ions, which reduces the growth of bacteria.
- Includes an adjustable nylon safety belt with a quick-release fastening system. The belt is supplied inside the packaging box.
- A version with ionizer is available under the following codes: CP0016V-I, CP0016VCS-I, CP0016VCSB-I. The effectiveness of the ionizer against viruses and bacteria has been tested and certified by TÜV Rheinland (Microbiological Test Report No. 60329708-001).
- Type 1 baby changing unit, intended for use from birth up to 12 months of age and up to a maximum weight of 20 kg.
- Certified in accordance with DIN EN 12221-1 and EK5/AK3 18-02 standards. These standards require baby changing units to withstand a static load test of 50 kg for 1 hour. In addition, units tested in our own laboratories have withstood loads of over 100 kg.

COMPONENTS AND MATERIALS

- **Bed:** approximately 1,900 cm², made of polypropylene.
- **Disposable liner dispenser:** with lock and special Mediclinics key, made of polypropylene.
- **Opening/closing mechanism:** always concealed, consisting of a pair of reinforced steel hinges and a pneumatic cylinder.

TECHNICAL DATA

Empty weight CP0016V	*13,4 kg*
Empty weight CP0016VCS-VCSB	*17,6 kg*
Recommended Installation height	*80 units*
Recommended installation height (handicapped)	*800 mm at lowest point* *700 mm at lowest point*

DIMENSIONS

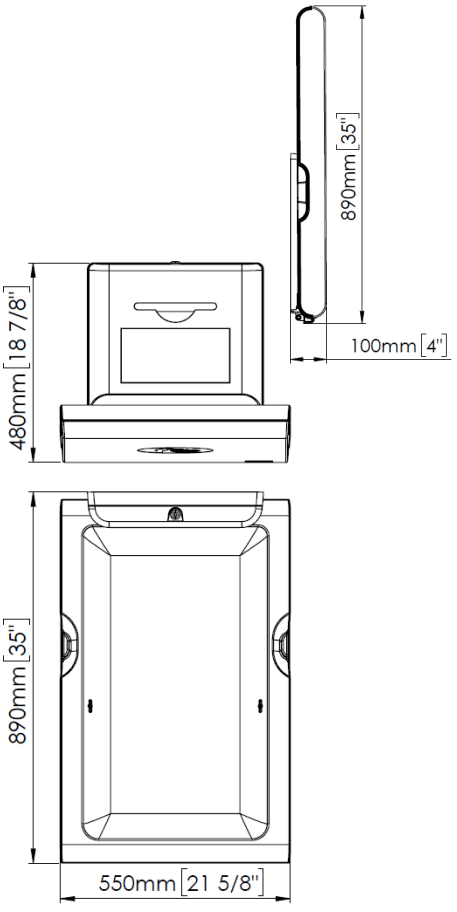

Mediclinics S.A. reserves the right to make changes or modifications to the products and their specifications without prior notice.

Baby changing station

GUIDE SPECIFICATION

Wall-mounted vertical baby changing station shall be made of polypropylene and shall be available in two versions: with a front panel made of white polypropylene, or with a front panel made of AISI 304 stainless steel in satin, matte black, and various PVD finishes. The white polypropylene version shall weigh 13,4 kg, while the stainless steel version shall weigh 17,6 kg. The unit shall include a built-in liner dispenser with a capacity of 80 units and an adjustable safety strap made of nylon. The changing bed shall measure 1.900 cm², shall be made of polypropylene, and shall be protected with an antimicrobial technology based on silver ions. A version with built-in ionizer shall be optionally available. The unit shall comply with applicable standards for baby changing stations (DIN EN 12221-1 and EK5/AK3 18-02).

ASSEMBLY / RECOMMENDED INSTALLATION HEIGHTS

Fix the mounting chassis on the wall using the provided screws through the mounting chassis holes (points indicated by an “S” in the figure below) and always following, step by step, the detailed instructions contained in the “Installation and safety instructions manual”, provided with the unit.

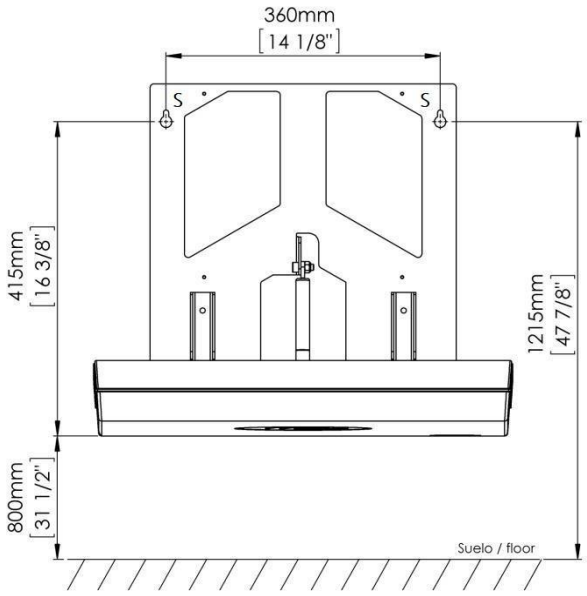

Warning: to ensure that the unit works properly and safely it must be installed according to the Mediclinics instructions supplied with the BabyMedi®.
The fixing systems supplied with this changing station are not suitable for installation on plasterboard or hollow walls. In order to install the unit on this type of wall, fastening anchors and tools specific for plasterboard or hollow walls must be used. Due to the problems posed by installations on this type of walls, with regard to fixing, it is recommended that the installation is carried out by technicians specialized in installations on this type of walls. Mediclinics is not responsible for the installation of its changing stations on plasterboard or hollow walls.

CERTIFICATIONS

Mediclinics S.A. reserves the right to make changes or modifications to the products and their specifications without prior notice.